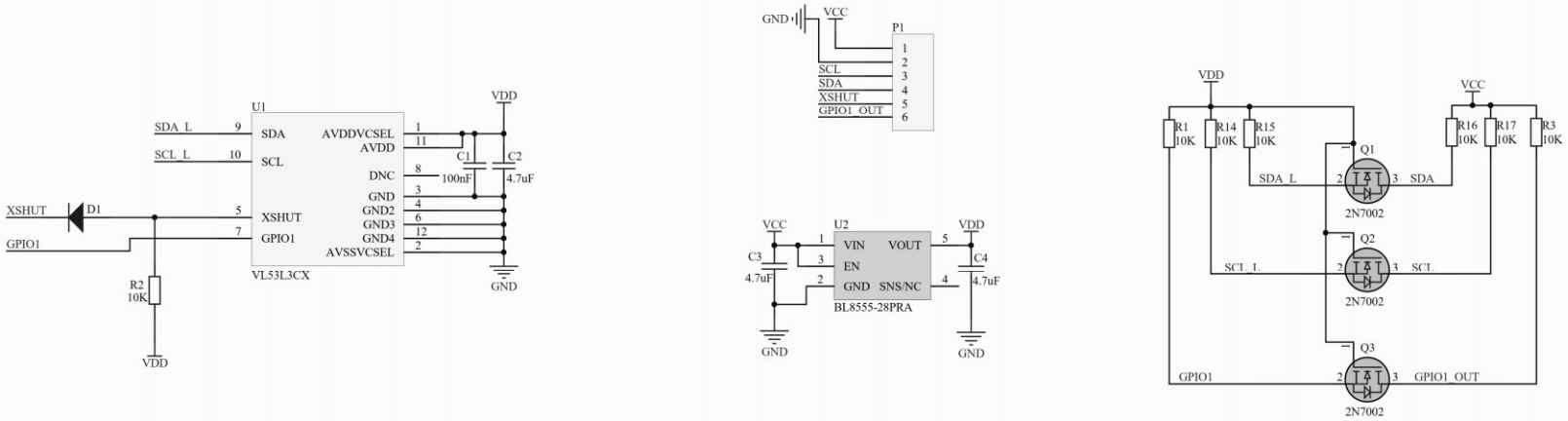

Title: *VL53L3CX ToF Distance Sensor*		Code:	*SEN0378*
Drawn: *Aaron-CD*	Revision: *V1.0*	Size:	*A3*
Page: *1 of 1*	Date: *2021/2/22*	Time:	*16:32:05*