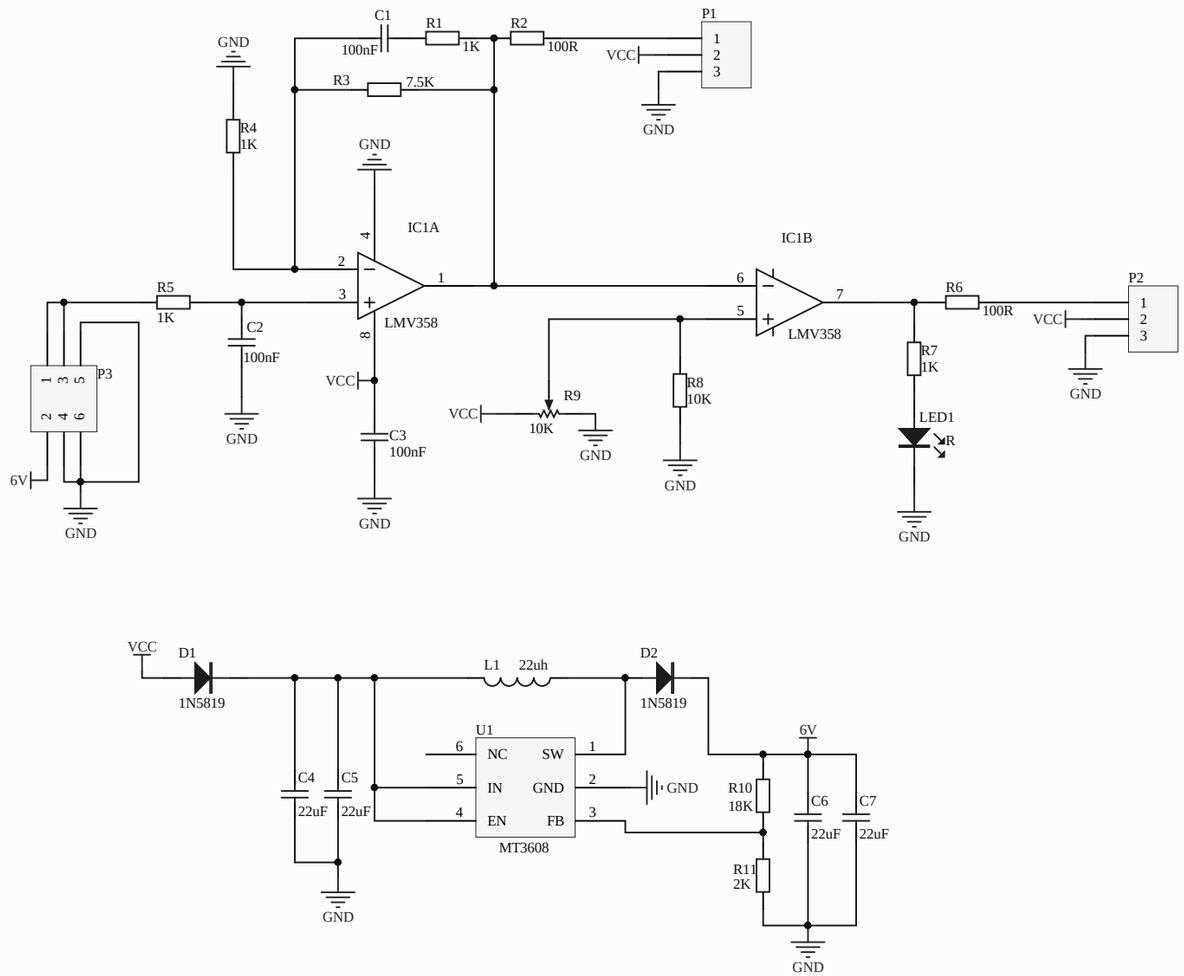

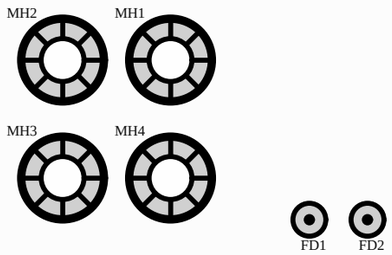

Title: *CO2 Sensor*		Code:	*SEN0159*
Drawn: *Aaron-CD*	Revision: *V2.0*	Size:	*A3*
Page: *1 of 1*	Date: *2021/1/26*	Time:	*9:35:29*