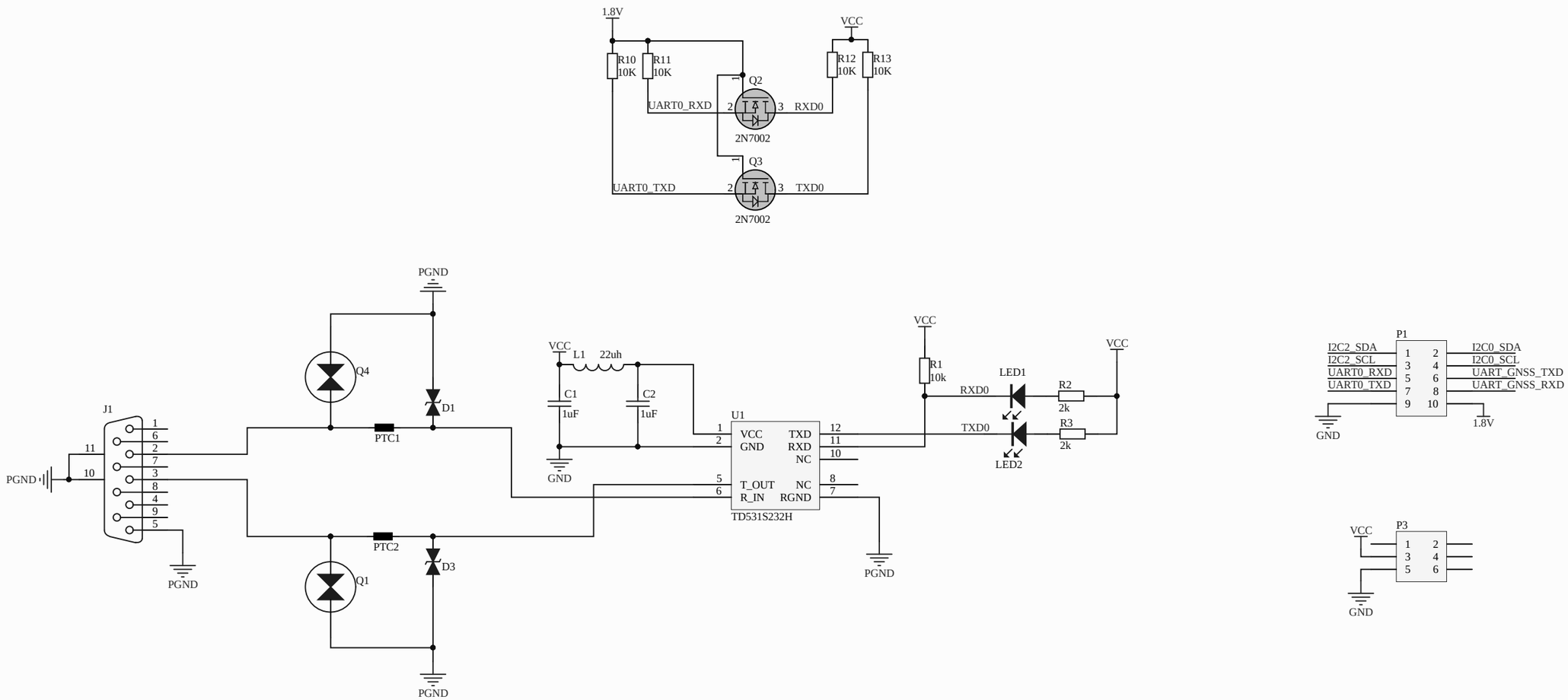

Title: *LattePanda RS232*		Code: *DFR0734*	
Drawn: *Aaron-CD*	Revision: *V1.0*	Size: *A3*	
Page: *1 of 1*	Date: *2020/10/16*	Time: *16:39:42*	