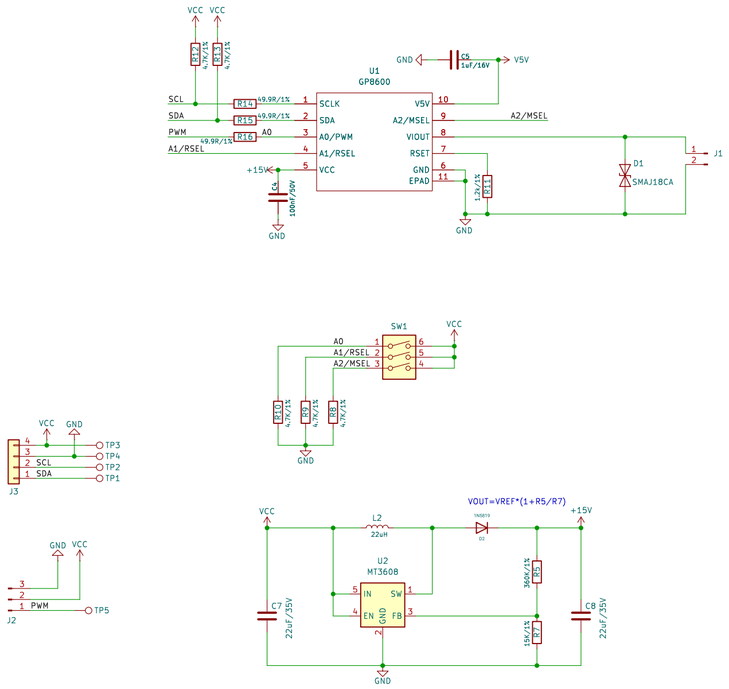

H1 H2 FID1 FID2

DFRobot

Sheet: /

File: [DFR1229]GP8600 DAC Module(V1.0.0).kicad_sch

Title: Gravity AI Gas Sensor

Size: A2	Date: 2024-03-13	**Rev: V0.0.1**
KiCad E.D.A. 9.0.2		Id: 1/1