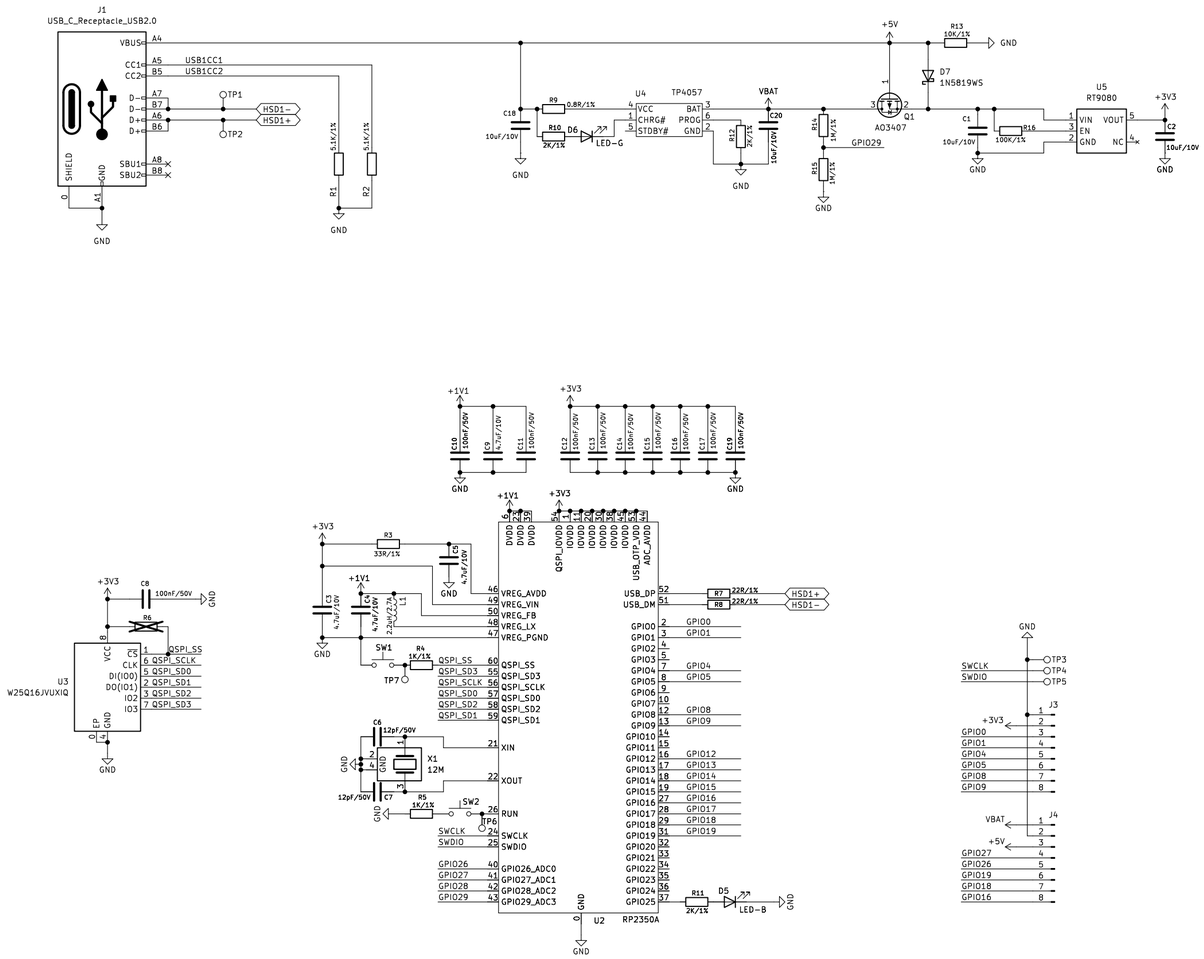

FID1

FID2

Sheet: /

File: [DFR1188][M027.00974]Beetle RP2350(V1.0.0).kicad_sch

Title:

Size: A2	Date: 2024-08-27	**Rev: V1.0.0**
KiCad E.D.A. 8.0.0		Id: 1/1