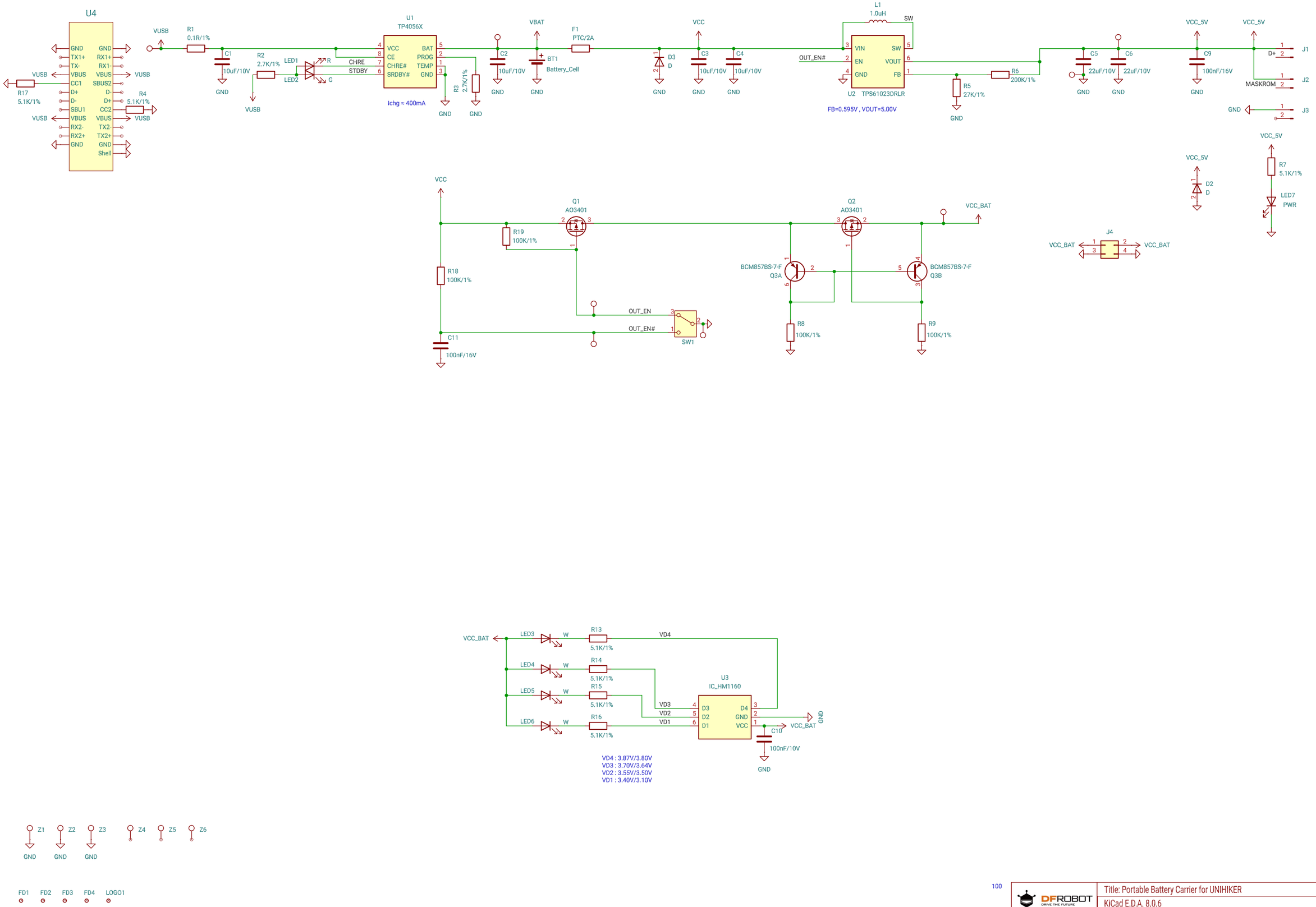

Title: Portable Battery Carrier for UNIHIKER		
KiCad E.D.A. 8.0.6		
Drawn:lfwag-CD	SKU:DFR1197-1	Rev: V1.0
Size: A3	Page: 1/1	Date: 2024-12-26

Dfrobot