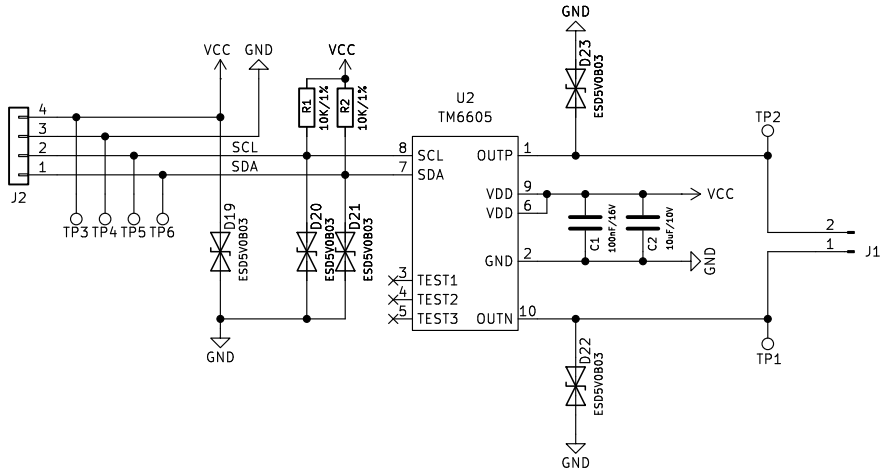

FID1
Fiducial

FID2
Fiducial

H1 H2

U1
DFRobot

DFRobot

Title: DF Kicad Project Temlate		
KiCad E.D.A. 9.0.2		
Drawn:LP	SKU:DRI0056	Rev: V1.0.0
Size: A4	Page: 1/1	Date: 2025-03-22