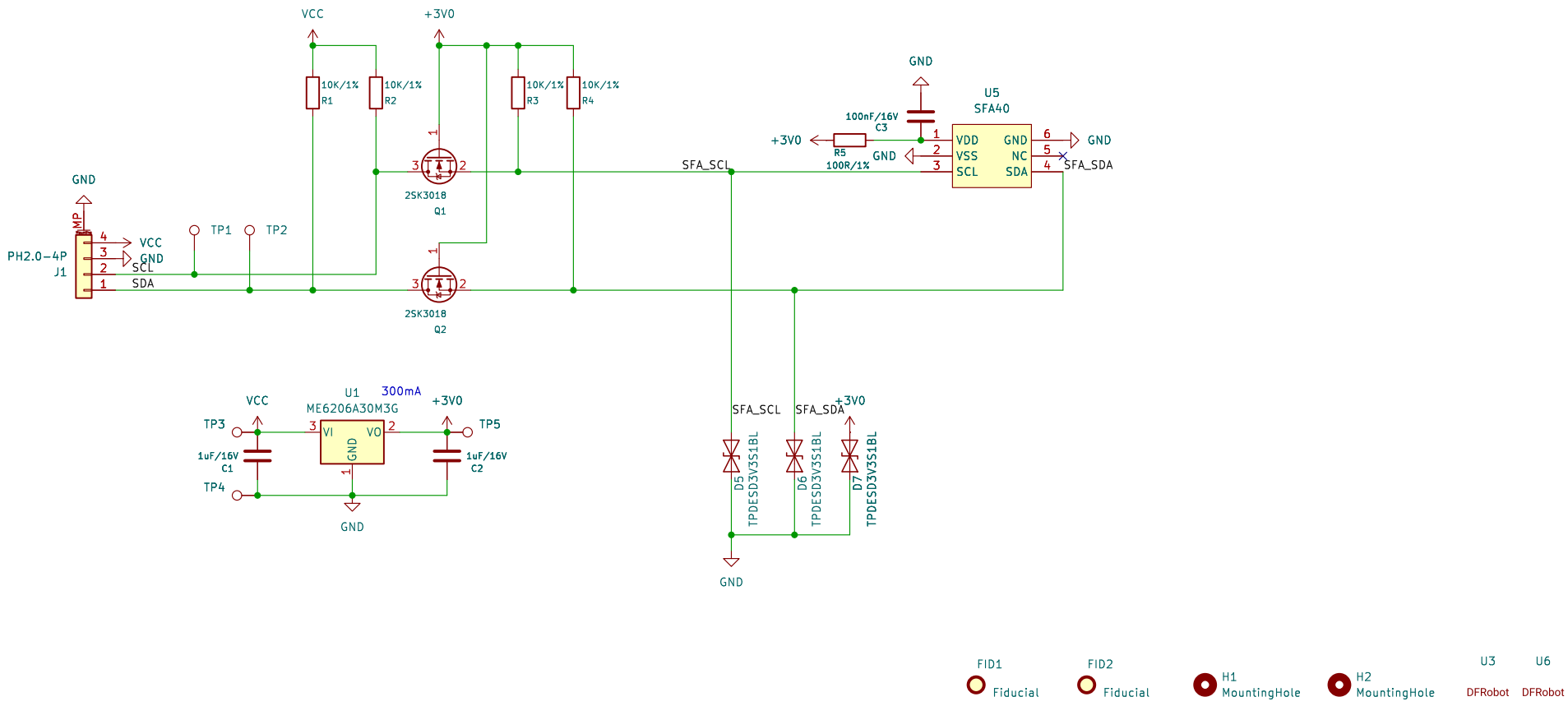

FID1 Fiducial

FID2 Fiducial

H1 MountingHole

H2 MountingHole

U3 DFRobot

U6 DFRobot

100

DFRobot

Title: Gravity:SFA40 HCHO Sensor		
KiCad E.D.A. 9.0.2-9-g92f6307ebb		
Drawn:HDJ	SKU:SEN0661	Rev: V1.0.0
Size: A4	Page: 1/1	Date: 2025-06-16